MO60-RN4-SC

Outdoor waste bins

MODULA
Waste Solutions

Origin ITALY Customs tariff code 73239900 CE marking not required

DESCRIPTION

Quadruple waste bin on base from the Modula line in anthracite grey painted steel, designed to be practical and functional.

It is fitted with four 90 L plastic bag holders with front removal, without inner bins.

The kit also includes 5 adhesive pictograms to identify the type of waste at a glance and make recycling easier.

The weighted base ensures stability and allows free-standing placement without wall fixing, with the option of fixing it to the ground.

TECHNICAL DETAILS

Material	– top cover and door in galvanised steel, 1.5 mm thick, with thermosetting polyester coating; – steel tube, 1.5 mm thick, with cataphoresis treatment and thermosetting polyester coating; – PP plastic base and steel counterweight, 5 mm thick, with cataphoresis treatment; PP plastic containers
Colour	– Anthracite grey (steel parts) – Black (plastic parts)
Dimensions	85 × 78 × H 97.5 cm
Opening dimensions	40 × 14 cm
Weight	40.5 kg
Capacity	90 + 90 + 90 + 90 L
Pieces per pack	1 pc

TECHNICAL DRAWING

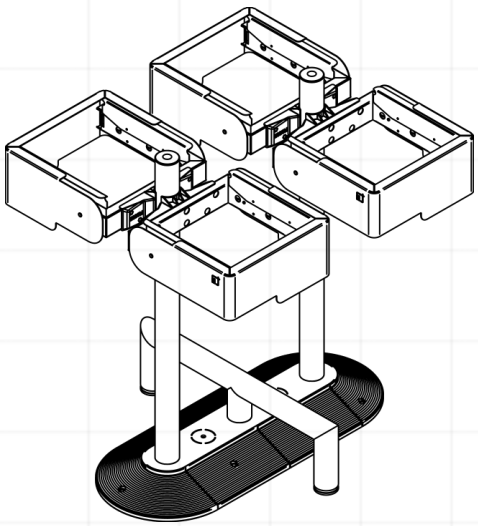

85 × 78 × H 97.5 cm

FRONT REMOVAL

VARIANTS

ITEM CODE	FINISH	EAN CODE	PACKAGING
MO60-RN4-SC	Anthracite grey	8033630054343	pallet 80 × 120 × H 120 cm

PICTOGRAMS INCLUDED

General waste Plastic Glass Organic waste Paper

13 × 13 cm stickers

Item manufactured in our own factories. No CE marking, as it is not required by the European directive.

Stil Casa di Marcheselli Angelo & C. s.n.c.
Via Milano 195 — 46019 Cogozzo di Viadana (MN), Italy
Tax code, VAT no. and Companies Register MN 01764450209 · R.E.A. MN 180100 · Mechanographic code MN 018407

Tel. +39 0375 88225 · Mobile +39 371 366 7407
www.stil-casa.it — stilcasa@stil-casa.it
SDI code W7YVJK9 · PEC stilcasa@casellapec.info