# MO60-RN2

Outdoor waste bins

MODULA
Waste Solutions

Origin ITALY  Customs tariff code 73239900  CE marking not required

## DESCRIPTION

Double waste bin on base from the Modula line in anthracite grey painted steel, designed to be practical and functional.

It comes with two roomy, sturdy 53 L plastic inner bins with front removal, for efficient waste disposal.

The kit also includes 5 adhesive pictograms to identify the type of waste at a glance and make recycling easier.

The weighted base ensures stability and allows free-standing placement without wall fixing, with the option of fixing it to the ground.

## TECHNICAL DETAILS

| | |
|---|---|
| Material | – top cover and door in galvanised steel, 1.5 mm thick, with thermosetting polyester coating;<br>– steel tube, 1.5 mm thick, with cataphoresis treatment and thermosetting polyester coating;<br>– PP plastic base and steel counterweight, 5 mm thick, with cataphoresis treatment; PP plastic containers |
| Colour | – Anthracite grey (steel parts)<br>– Black (plastic parts) |
| Dimensions | 35.5 × 85 × H 97.5 cm |
| Opening dimensions | 40 × 14 cm |
| Weight | 29 kg |
| Capacity | 53 + 53 L |
| Pieces per pack | 1 pc |

## TECHNICAL DRAWING

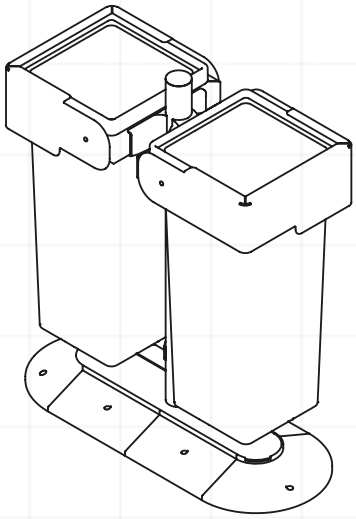

35.5 × 85 × H 97.5 cm

## FRONT REMOVAL

## VARIANTS

| ITEM CODE | FINISH | EAN CODE | PACKAGING |
|---|---|---|---|
| MO60-RN2 | Anthracite grey | 8033630054312 | pallet 80 × 60 × H 110 cm |

## PICTOGRAMS INCLUDED

General waste  Plastic  Glass  Organic waste  Paper

13 × 13 cm stickers

Item manufactured in our own factories. No CE marking, as it is not required by the European directive.

ALL IN ITALY

Stil Casa di Marcheselli Angelo & C. s.n.c.
Via Milano 195 — 46019 Cogozzo di Viadana (MN), Italy
Tax code, VAT no. and Companies Register MN 01764450209 · R.E.A. MN 180100 · Mechanographic code MN 018407

Tel. +39 0375 88225 · Mobile +39 371 366 7407
www.stil-casa.it — stilcasa@stil-casa.it
SDI code W7YVJK9 · PEC stilcasa@casellapec.info