MO60-CP2-SC

Outdoor waste bins

MODULA
Waste Solutions

Origin ITALY Customs tariff code 73239900 CE marking not required

DESCRIPTION

Double covered waste bin on base from the Modula line in anthracite grey painted steel, with top cover and front door with key lock, designed to be practical and functional.

It is fitted with two 90 L plastic bag holders with front removal, without inner bins.

The kit also includes 5 adhesive pictograms to identify the type of waste at a glance and make recycling easier.

The weighted base ensures stability and allows free-standing placement without wall fixing, with the option of fixing it to the ground.

TECHNICAL DETAILS

Material	– top cover and door in galvanised steel, 1.5 mm thick, with thermosetting polyester coating; – steel tube, 1.5 mm thick, with cataphoresis treatment and thermosetting polyester coating; – PP plastic base and steel counterweight, 5 mm thick, with cataphoresis treatment; PP plastic containers
Colour	– Anthracite grey (steel parts) – Black (plastic parts)
Dimensions	35 × 85 × H 107.5 cm
Opening dimensions	40 × 14 cm
Weight	27 kg
Capacity	90 + 90 L
Pieces per pack	1 pc

TECHNICAL DRAWING

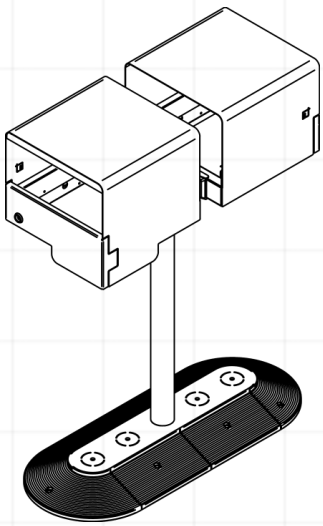

35 × 85 × H 107.5 cm

FRONT REMOVAL

VARIANTS

ITEM CODE	FINISH	EAN CODE	PACKAGING
MO60-CP2-SC	Anthracite grey	8033630054480	pallet 80 × 60 × H 120 cm

PICTOGRAMS INCLUDED

General waste Plastic Glass Organic waste Paper

13 × 13 cm stickers

Item manufactured in our own factories. No CE marking, as it is not required by the European directive.